AUSWELD

PRODUCT CATALOGUE · 2026

OUTDOOR LIGHTING

LIGHT POLES

Round tapered steel poles, 4.0 m, 5.7 m and 8.0 m, in hot-dip galvanised or duplex black powder-coated finish.

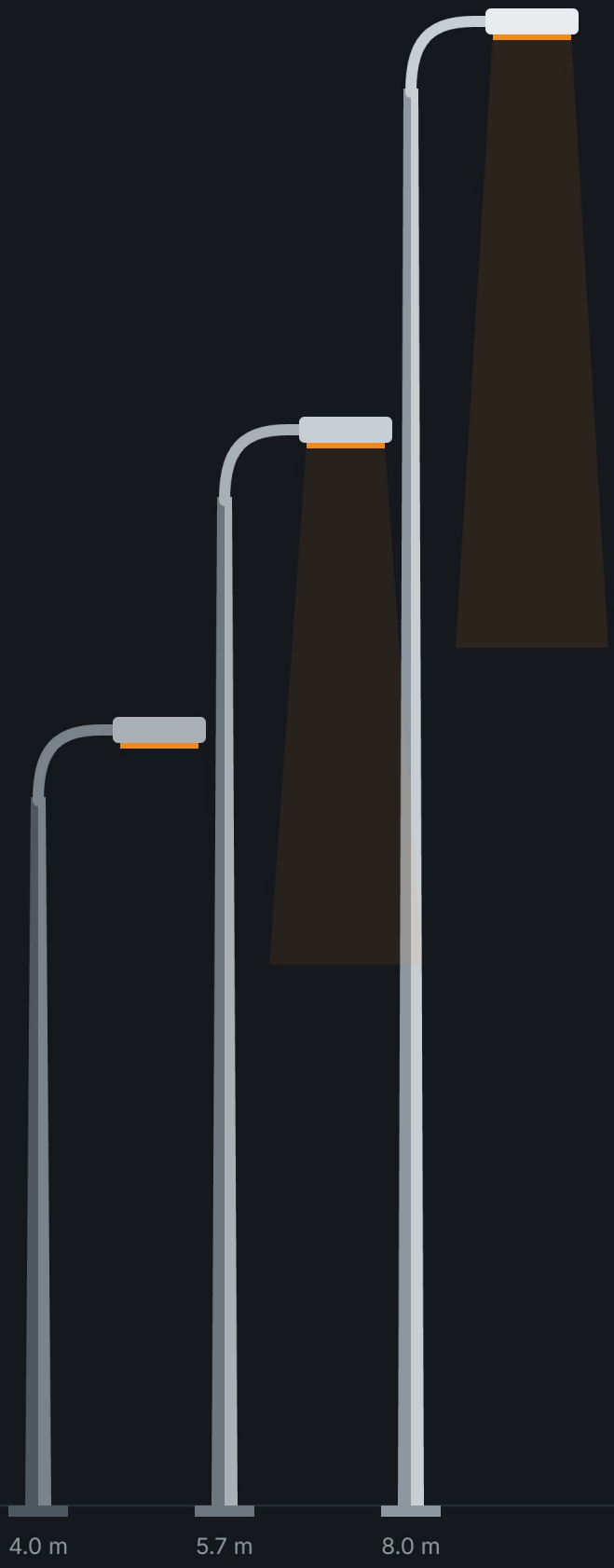

6 MODELS

3 HEIGHTS

20 yr GALV. WARRANTY

ausweld.au
info@ausweld.au
03 9964 4699

PRODUCT RANGE

One pole profile, three heights, two finishes. The 4.0 m and 5.7 m poles taper Ø137 → Ø76 mm in 3 mm steel on a 300 mm base plate; the 8.0 m pole tapers Ø168 → Ø76 mm in 4 mm steel on a 350 mm base plate. All have a hinged service door.

HOT-DIP GALVANISED

4.0 m

LTP137640H

Weight	42 kg
Galv. warranty	20 years

$400 excl. GST

5.7 m

LTP137657H

Weight	50 kg
Galv. warranty	20 years

$500 excl. GST

8.0 m

LTP167680H

Weight	≈ 110 kg
Galv. warranty	20 years

$720 excl. GST

BLACK POWDER-COATED (HDG + POWDER DUPLEX)

4.0 m

LTP137640B

Weight	42 kg
Galv. warranty	20 years
Paint warranty	3 years

$450 excl. GST

5.7 m

LTP137657B

Weight	50 kg
Galv. warranty	20 years
Paint warranty	3 years

$560 excl. GST

8.0 m

LTP167680B

Weight	≈ 110 kg
Galv. warranty	20 years
Paint warranty	3 years

$790 excl. GST

CHOOSE GALVANISED

for industrial sites, coastal exposure and the longest warranty (20 years on galvanising).

CHOOSE BLACK DUPLEX

for architectural and landscape schemes: 20-year galvanising plus 3-year powder coat warranty. Dark grey by custom order.

Prices in AUD excl. GST, November 2026. Subject to change; confirm stock before ordering. Anchor bolts not included

TECHNICAL DATA

ELEVATION & BASE PLATE (NOT TO SCALE) · ( ) = 8.0 M

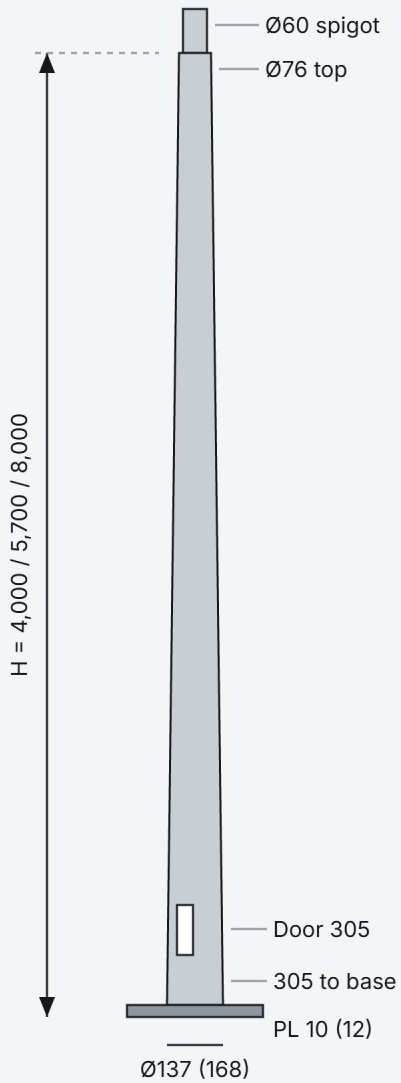

BASE PLATE – PLAN

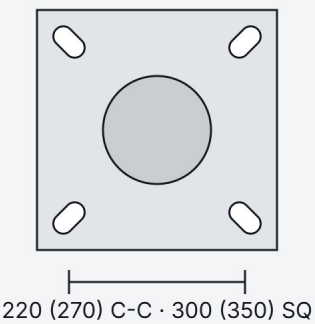

DIMENSIONS BY HEIGHT (MM)

H	Base Ø	Top Ø	Wall	Base plate	Slot C-C
4,000	137	76	3	300 × 300 × 10	220
5,700	137	76	3	300 × 300 × 10	220
8,000	168	76	4	350 × 350 × 12	270

SPECIFICATION – ALL MODELS

Item	Value
Profile	Round tapered (conical) steel
Construction	Seam welded, continuous MIG
Steel grade	SS400 (JIS G3101) ≈ HA250 (AS/NZS 1594), fy ≥ 245 MPa
Base plate holes	4 slots: 25 × 45 (4.0, 5.7 m), 28 × 50 (8.0 m)
Anchor bolts (by others)	4 J-bolts + levelling nut, washer, lock nut: M20 × 450 (4.0, 5.7 m), M24 × 600 (8.0 m)
Service door	305 high, 305 above base; hinged, stainless lock, earth lug
Luminaire fixing	Post-top spigot Ø60 mm OD (Ø76 on request)
Finish	HDG to AS/NZS 4680, or HDG + black powder coat
Design standards	AS/NZS 1170, AS/NZS 4600
Wind design basis	Region A, Terrain Cat. 2, V_{ULS} 45 m/s
Luminaire allowance	Projected area ≤ 0.25 m²

SKUs, weights and prices per model: see page 2.

APPLICATIONS

01
Car parks & commercial premises

02
Residential driveways & gardens

03
Pedestrian paths

04
Parks & recreation areas

05
Industrial facilities

06
Landscape & architectural lighting

INSTALLATION NOTES

- Surface mount on a concrete footing with 4 cast-in J-bolts (M20 for 4.0/5.7 m, M24 for 8.0 m, supplied by others), levelling nut under the plate.
- Footing size and bolt set to suit site wind region and soil – by project engineer.
- Luminaire weight and windage area to be checked against pole rating.
- Electrical work by a licensed electrician to AS/NZS 3000.

HOW TO ORDER

1. Pick height (4.0, 5.7 or 8.0 m) and finish (HDG or black duplex).
2. Quote the SKU and quantity – order online at ausweld.au or by email.
3. Ask us about custom colours, mounting and luminaire fit.
4. Check delivery and transport options before dispatch.

ALSO AVAILABLE
Surface Bollard OD90 – 1.2 m

$60 AUD excl. GST